VADEMECUM STOP

INTERLOCKED PACKING OF WALLS

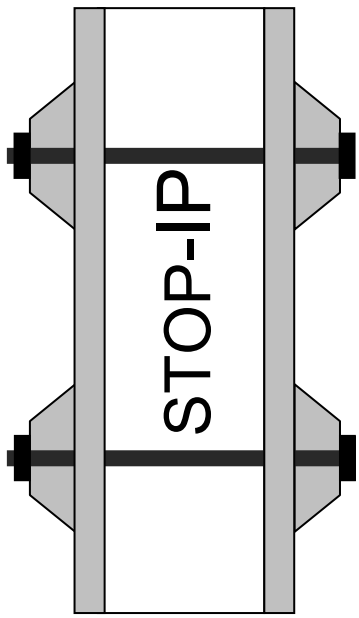

© CNVVF- Using allowed under CNVVF supervision

ABRUZZO EARTHQUAKE 2009
COORDINATION TEAM FOR TEMPORARY WORKS

WORKING GROUP FOR THE VADEMECUM STOP
under the supervision of Sergio Basti - Central director for emergency and urgent technical rescue manual licensed by note no. EM3064/5001-11 dated 2009-06-15

S.Grimaz (coordinator)
L.Munaro, M.Cavriani, E.Mannino, C.Bolognese, M.Caciolai, L.Ponticelli, M.Bellizzi, A. D'Odorico, A.Maiolo

With the contribute of:
F.Barazza, P.Malisan, A.Moretti

Translated by:
L. Ponticelli, S. La Mendola, E. Gissi
and
Keith Bellamy
Section Leader, Urban Search & Rescue
Hampshire Fire and Rescue Service, UK

© CNVVF- Using allowed under CNVVF supervision

INTERLOCKED PACKING OF WALLS: general recommendations

STOP-**IP**

Movement to constrain: buckling of walls

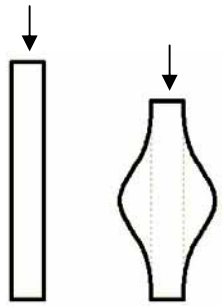

Description

Excessive vertical loads can provoke the buckling of walls with transverse deformations.

Warning

This procedure cannot be used for concrete walls and can only be implemented after evaluation of the damage has taken place to ensure a safe work site.

Function of the interlocked packing: to contain the transverse deformation of the wall improving at the same time the resistance of the wall to vertical loads.

PACKING OF THE WALL WITH THE "RAPID" SYSTEM

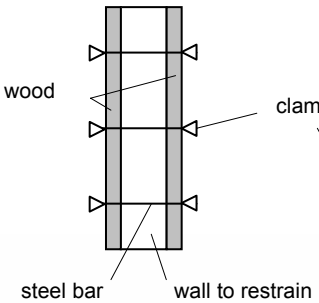

"RAPID" clamp

"RAPID" tensioner

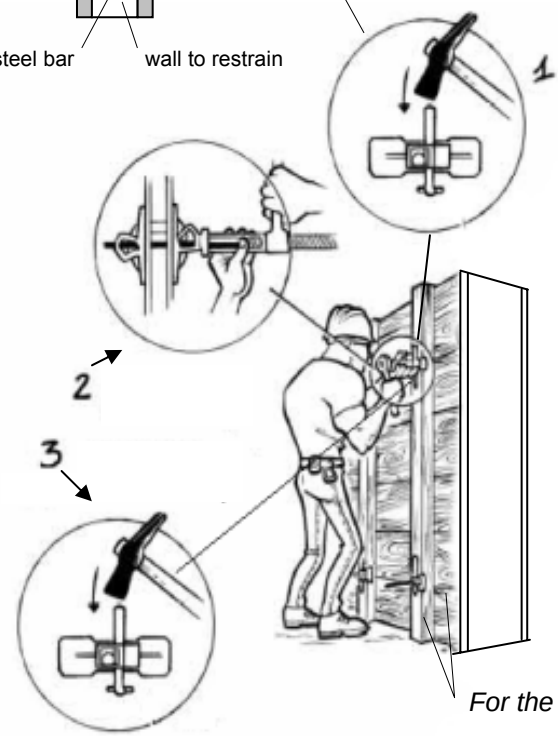

The procedure for installing the "RAPID" system

a. Lock a clamp to one end of the steel bar (nr. 1 in the sketch).
b. Tension the steel bar using clamp and tensioner on the other side of the wall (nr. 2 in the sketch).
c. Lock the second clamp (nr. 3 in the sketch).
d. Remove the tensioner and start on a new steel bar.

For the correct spacings see page 2/3

Images downloaded by the web site: "www.comated.com/web2004/default.asp"

© CNVVF- Using allowed under CNVVF supervision

INTERLOCKED PACKING OF WALLS: Placement and spacing

STOP-**IP**

A) Drilling the wall. Diameter of the holes: $Ø_{bar}$ + 2mm

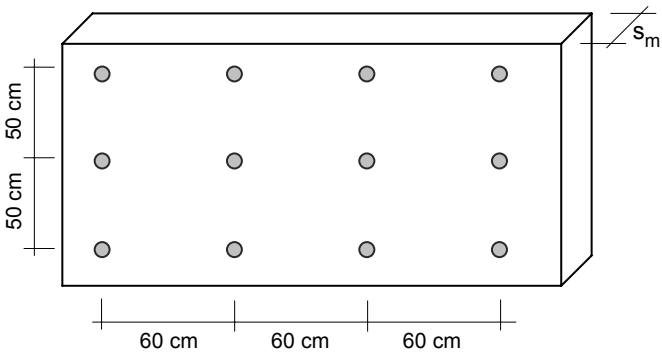

B) Insertion of the steel bars with diameter as in Table 1: $Ø_{bar}$

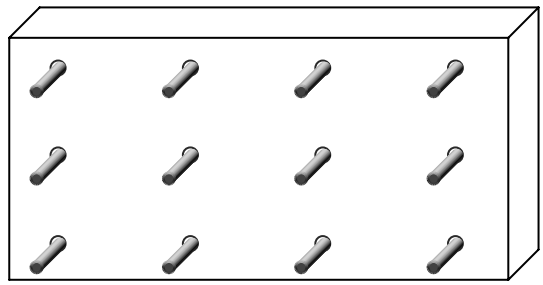

C) Place 5x20 wooden planks as shown on both the sides of the wall. The steel bars can be in contact with the wooden planks to support them.

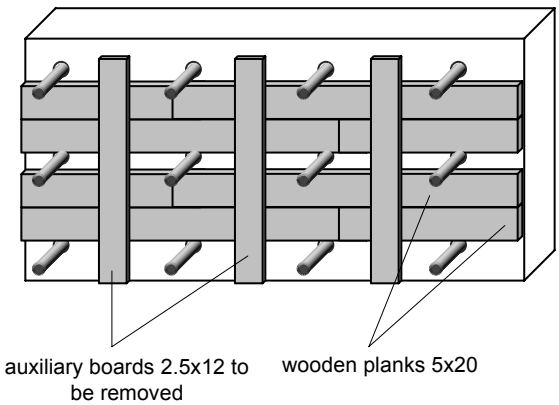

D) Place two 10x10 wooden planks on both the sides of the steels vertically and on both the sides of the wall.

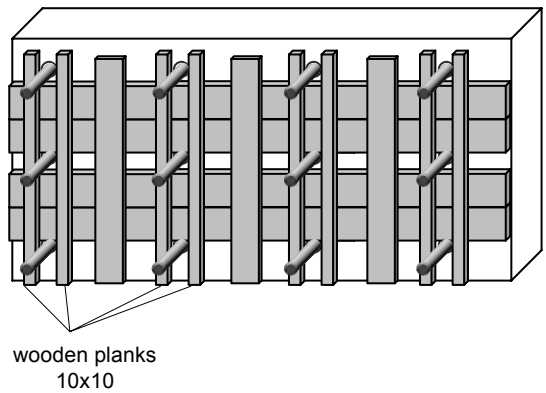

E) Place steel plate (thickness 4 mm) on both the sides of the wall on every steel bar (hole diameter = $Ø_{bar}$ + 2 mm).

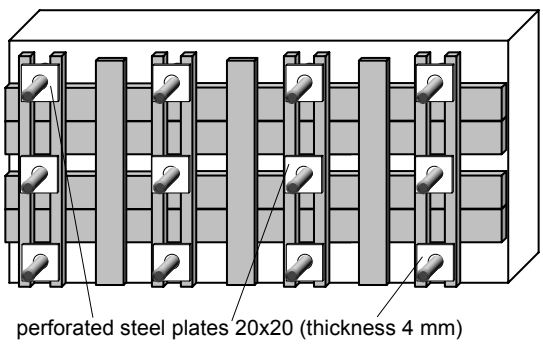

F) Tensioning of the bars with the "RAPID" system showed on page 1/3

Table 1 – Sizing of the ribbed steel bars

Thickness of the wall (s_m)	Ribbed bars: minimum diameter ($Ø_{bar}$) (mm)
$s_m \leq 50$ cm	Ø6
50 cm < $s_m \leq 80$ cm	Ø8

© CNVVF- Using allowed under CNVVF supervision

INTERLOCKED PACKING OF WALLS

Field of application

The use of this procedure is only allowed on masonry walls less than 80 cm thick.

General assumptions

The aim of the intervention is to increase the load bearing resistance of a wall by the reduction of its transverse displacements. The tensioning of the steel bars must be done on the side of the wall nearer to the exit route of the building. For the safety of the operators this intervention is not allowed on heavily damaged walls.
Before stiffening the wall it is necessary to shore the ceiling slabs to reduce the loads on the wall. The shore can be removed at the end to transfer the loads to the reinforced wall.
Don't cut the steel bars but bend them when finished. It might be necessary to re-tension them in the future.

Instructions for the interlocked packing system

Based on the thickness of the wall (s_m), it is possible to calculate the diameter of the steel bar required using table 1 on page 2/3. Erect the wooden system as shown on page 2/3 and then tension the steel bars as shown on page 1/3.

PROHIBITIONS	1. Don't drill in to walls of heritage buildings or similar if not authorized. 2. The use of this procedure is not allowed on heavily damaged masonry walls.
DANGERS	1. Before drilling into the wall check for the presence of utilities (such as gas, power cables, water, etc.). 2. Remove any damaged or loose items that could fall from height before drilling in to the wall.

© CNVVF- Using allowed under CNVVF supervision

INTENTIONALLY BLANK PAGE

© CNVVF- Using allowed under CNVVF supervision