## VADEMECUM STOP

# SHORES FOR APERTURES

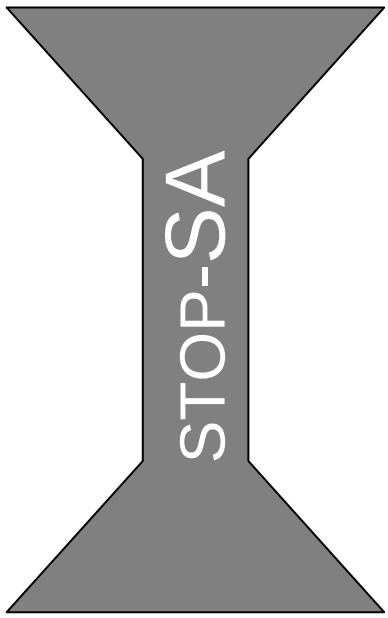



© CNVVF- Using allowed under CNVVF supervision

ABRUZZO EARTHQUAKE 2009
COORDINATION TEAM FOR TEMPORARY WORKS

WORKING GROUP FOR THE VADEMECUM STOP
under the supervision of Sergio Basti - Central director for emergency and urgent technical rescue manual licensed by note no. EM3064/5001-11 dated 2009-06-15

*S.Grimaz (coordinator)*
*L.Munaro, M.Cavriani, E.Mannino, C.Bolognese, M.Caciolai, L.Ponticelli, M.Bellizzi, A. D'Odorico, A.Maiolo*

*With the contribute of:*
*F.Barazza, P.Malisan, A.Moretti*

*Translated by:*
*L. Ponticelli, S. La Mendola, E. Gissi*
*and*
*Keith Bellamy*
*Section Leader, Urban Search & Rescue*
*Hampshire Fire and Rescue Service, UK*


© CNVVF- Using allowed under CNVVF supervision

## **SHORES FOR APERTURES:** general recommendations

STOP-**SA**

Movement to constrain:
breaking of a lintel
and lateral distortion (if present)

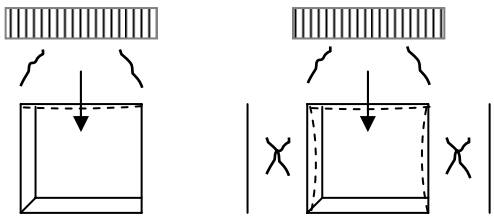

Description
Potential fall of blocks over the opening and loss of restrainment of the slab.

Lateral distorsion of the walls.

Function of the shore: to restrain the vertical loads

**"TIGHT" OPENINGS**
**(L ≤ 1.5 m)**

**"LARGE" OPENINGS**
**(1.5 m < L ≤ 3.0 m)**

SHORE ONLY

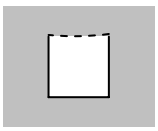

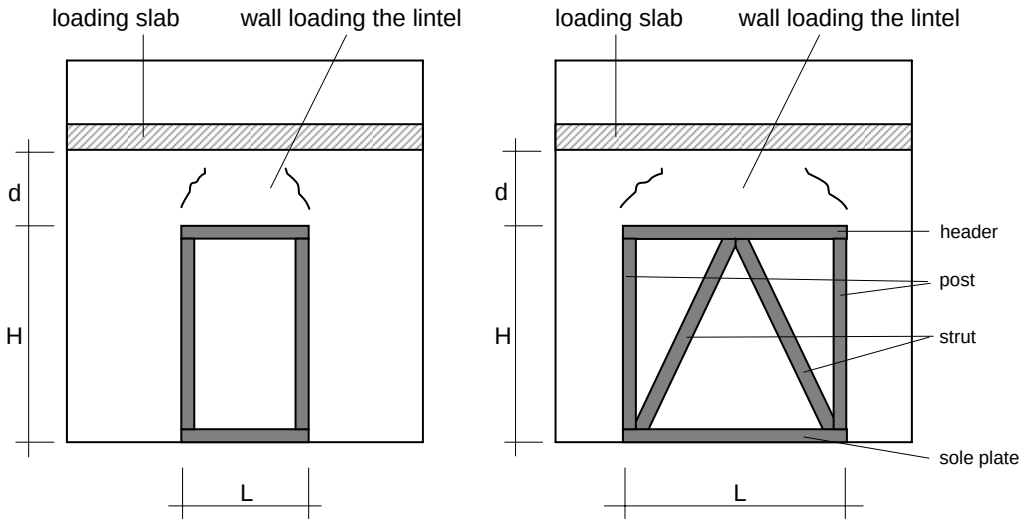


SHORE AND STIFFEN

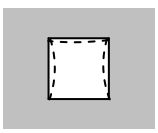

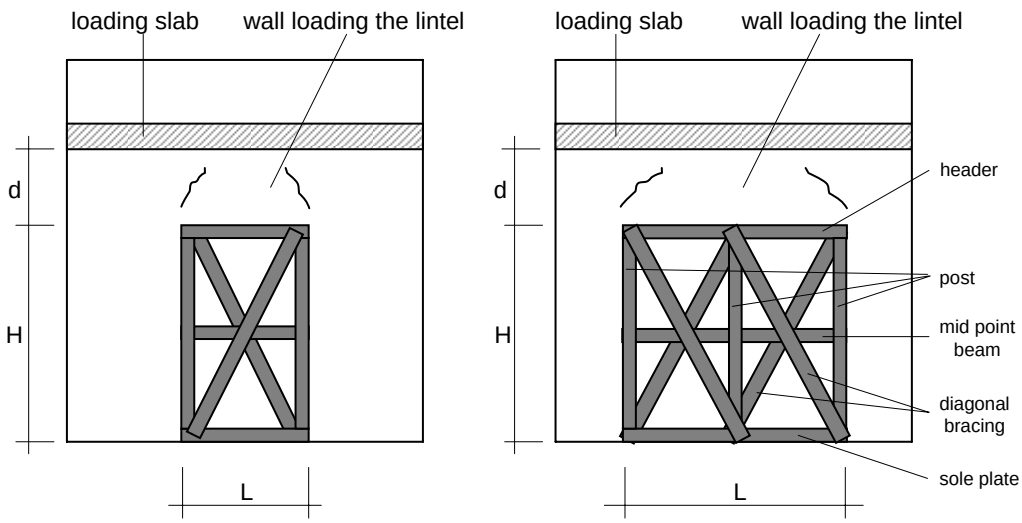



© CNVVF- Using allowed under CNVVF supervision

## **SHORES FOR APERTURES:** general recommendations

STOP-**SA**

External wall

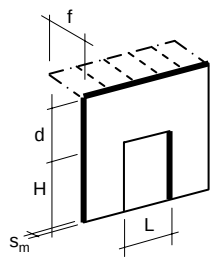


Internal wall

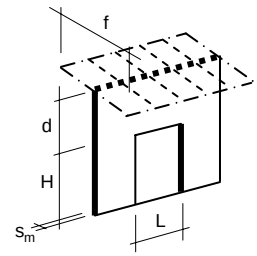


**Table 1** – Sizing of the elements (posts, struts and mid point beams)

| | | Width of loading slab f | $s_m$ | | | | |
|---|---|---|---|---|---|---|---|
| | | | ≤ 0.4 m | | 0.4 - 0.6 m | 0.6 - 0.8 m | 0.8 - 1.0 m |
| | | | single | double | double | double | double |
| | | | 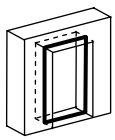 | 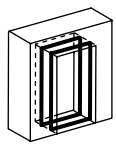 | 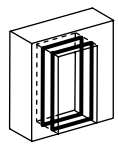 | 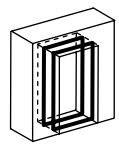 | 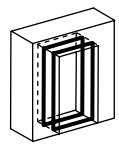 |
| "Tight" openings | L ≤1.0 m | f = 0m | 10x10 | 8x8 | 8x8 | 8x8 | 10x10 |
| | | 0m < f ≤ 1m | 13x13 | 10x10 | 10x10 | 10x10 | 13x13 |
| | | 1m < f ≤ 3m | 18x18 | 13x13 | 13x13 | 13x13 | 13x13 |
| | | 3m < f ≤ 5m | n.p. | 15x15 | 15x15 | 15x15 | 18x18 |
| | 1.0 m<L≤1.5 m | f = 0m | 13x13 | 10x10 | 13x13 | 13x13 | 13x13 |
| | | 0m < f ≤ 1m | 18x18 | 13x13 | 15x15 | 15x15 | 15x15 |
| | | 1m < f ≤ 3m | n.p. | 18x18 | 18x18 | 18x18 | 18x18 |
| | | 3m < f ≤ 5m | n.p. | 18x18 | 20x20 | 20x20 | 20x20 |
| "Large" openings | 1.5 m<L≤2.0 m | f = 0m | 13x13 | 10x10 | 10x10 | 13x13 | 13x13 |
| | | 0m < f ≤ 1m | 15x15 | 13x13 | 13x13 | 13x13 | 15x15 |
| | | 1m < f ≤ 3m | 20x20 | 15x15 | 15x15 | 18x18 | 18x18 |
| | | 3m < f ≤ 5m | n.p. | 18x18 | 18x18 | 20x20 | 20x20 |
| | 2.0 m<L≤3.0 m | f = 0m | 18x18 | 13x13 | 15x15 | 18x18 | 18x18 |
| | | 0m < f ≤ 1m | 20x20 | 15x15 | 18x18 | 18x18 | 20x20 |
| | | 1m < f ≤ 3m | n.p. | 20x20 | 20x20 | n.p. | n.p. |

*n.p. - not present: a specific design is needed*

| **Other elements** | |
|---|---|
| Braces | Planks 2.5 x 12 cm screwed/nailed on the struts by 3 screws Ø5x100 mm or by 3 nails L = 80 mm each edge for sections not bigger than 15x15<br>*or*<br>Planks 5 x 20 cm screwed/nailed on the struts by 3 screws Ø5x100 mm or by 3 nails L = 100 mm each edge for sections bigger than 15x15 |

**WARNING:**
If **d > L** no loading slab should be considered.
If the slab is ribbed parallel to the wall, the width of the loading slab should be safely assumed as 1m.


© CNVVF- Using allowed under CNVVF supervision

## SHORES FOR APERTURES

**Field of application**
These shores can be used only on buildings damaged by earthquakes.

**General assumptions**
These shores transfer the loads from the damaged lintel to the remaining structure, through as much as possible, the previous load path.

In case of necessity, the shores can stiffen the openings. Appropriate bracing should be provided (see page 2/3).

To simplify, only square cross section timber is used.

**Instructions for the use of this procedure**
By using the dimensions of the opening (height “H” and width “L”), the width “$s_m$” of the wall and the length of the slab loading the lintel, it is possible to calculate the sizing of the system using table 1 on page 2/3.
Only if the width of the wall is less than 0.4 m, it is possible to use either the single or the double system (see the table1 on page 2/3).

**WARNING**
All the values should be intended as a minimum. Bigger timbers can be used if necessary.


© CNVVF- Using allowed under CNVVF supervision

INTENTIONALLY BLANK PAGE


© CNVVF- Using allowed under CNVVF supervision