## VADEMECUM STOP

# SHORES FOR SLABS AND BALCONIES

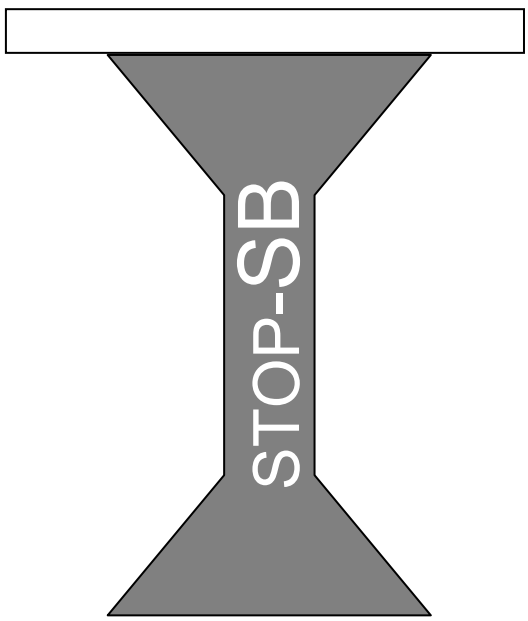



© CNVVF- Using allowed under CNVVF supervision

ABRUZZO EARTHQUAKE 2009
COORDINATION TEAM FOR TEMPORARY WORKS

WORKING GROUP FOR THE VADEMECUM STOP
under the supervision of Sergio Basti - Central director for emergency and urgent technical rescue manual licensed by note no. EM3064/5001-11 dated 2009-06-15

*S.Grimaz (coordinator)*
*L.Munaro, M.Cavriani, E.Mannino, C.Bolognese, M.Caciolai, L.Ponticelli, M.Bellizzi, A. D'Odorico, A.Maiolo*

*With the contribute of:*
*F.Barazza, P.Malisan, A.Moretti*

*Translated by:*
*L. Ponticelli, S. La Mendola, E. Gissi*
*and*
*Keith Bellamy*
*Section Leader, Urban Search & Rescue*
*Hampshire Fire and Rescue Service, UK*


© CNVVF- Using allowed under CNVVF supervision

## **SHORES FOR SLABS AND BALCONIES:** general recommendations

STOP-**SB**

### Movement to constrain:
sagging or excessive deflection

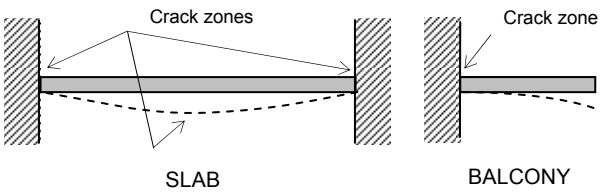


### Description
Excessive deflection of the slab due to a vertical seismic acceleration or excessive loads.
Evidence of the damages:
a) For balconies: rotation and cracks at the upper areas of the connections.
b) For slabs: excessive deflection, cracks in the middle on the underside and at the upper areas of the connections.

Function of the shore: to reduce either the deflections and/or the loads

## **SHORES FOR SLABS**: MAIN SCENARIOS AND SELECTION CRITERIA

**SCENARIO**

- A new single load path to the ground is available
- The ground is solid
- Shores for all the underlying slabs are possible
- Easy to build

- No new load path to the ground is available
  Shores for all the underlying slabs are impossible
- New load path is possible

**SOLUTION**

S SINGLE LINE
see STOP-**SB**/S (page 2/10)

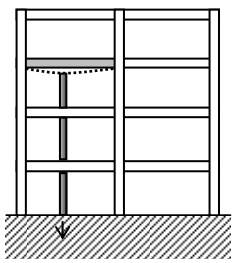

T TRUSS
see STOP-**SB**/T (page 8/10)

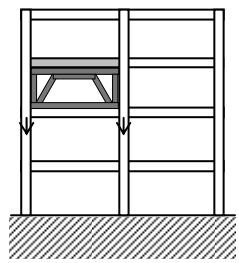

**WARNING: correct procedure to implement a single line solution**

In the case of a single line solution, it is necessary to start from the bottom of the building and work to the top (see below).

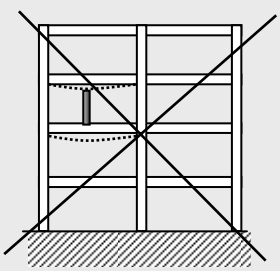

**NO**

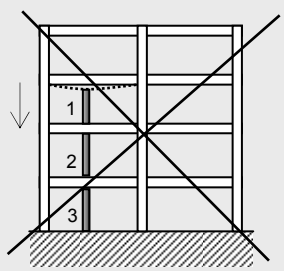


**NO**

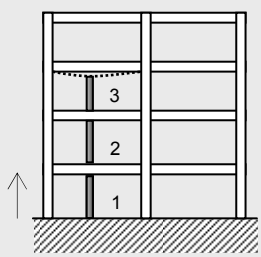


**YES**

*1-2-3 : building sequence*


© CNVVF- Using allowed under CNVVF supervision

## SHORES FOR SLABS AND BALCONIES "S" SOLUTION: general recommendations

STOP-**SB**/S

### Reference sketches

**S**

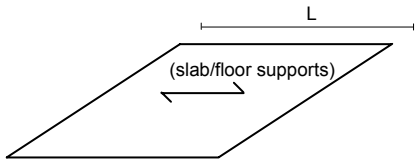


Geometrical parameters

L : span

i : transverse distance between uprights

H : distance between two consecutive floors

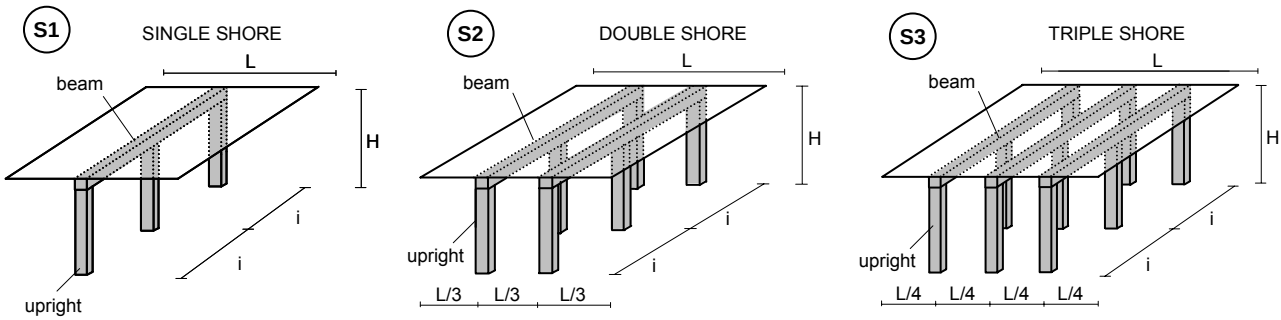


**Table 1** – Sizing of the wooden shore
Cross section of the uprights and of the beams (cmxcm) – [reference sketch]

| | i (m) \ L (m) | L ≤ 3.0m | 3.0m < L ≤ 4.0m | 4.0m < L ≤ 5.0m | 5.0m < L ≤ 6.0m | 6.0m < L ≤ 7.0m |
|---|---|---|---|---|---|---|
| H ≤ 4 m | 1.0 | 13x13-[S1] | 13x13-[S1] | 13x13-[S2] | 13x13-[S3] | 13x13-[S3] |
| | 1.5 | 13x13-[S1] | 13x13-[S2] | 13x13-[S3] | 15x15-[S3] | n.p. |
| | 2.0 | 15x15-[S2] | 15x15-[S2] | 15x15-[S3] | n.p. | n.p. |
| | 2.5 | 15x15-[S3] | n.p. | n.p. | n.p. | n.p. |
| 4m<H≤6m | S1 is not allowed if H > 4m.<br>The same sections used for the sketches S1 and S2 for H ≤ 4m are allowed if properly braced (the bracing system can be implemented using planks 2.5 x 12 cm nailed on the uprights with 3 nails L = 80 mm in both directions). | | | | | |

**Table 2** – Sizing of the shore made with wooden beams and telescopic steel upright struts
Cross section of the beams (cmxcm) – Class of the iron prop (see EN 1065) - [reference sketch]

| | i (m) \ L (m) | L ≤ 3.0m | 3.0m < L ≤ 4.0m | 4.0m < L ≤ 5.0m | 5.0m < L ≤ 6.0m | 6.0m < L ≤ 7.0m |
|---|---|---|---|---|---|---|
| H< 3 m | 1.0 | 13x13-C30-[S1] | 13x13-C30-[S2] | 13x13-E30-[S2] | 13x13-E30-[S3] | 13x13-E30-[S3] |
| | 1.5 | 13x13-E30-[S1] | 13x13-E30-[S2] | 13x13-E30-[S3] | n.p. | n.p. |
| | 2.0 | 15x15-E30-[S2] | 15x15-C30-[S3] | n.p. | n.p. | n.p. |
| | 2.5 | 15x15-E30-[S3] | n.p. | n.p. | n.p. | n.p. |
| H= 3-4 m | 1.0 | 13x13-D40-[S1] | 13x13-D40-[S2] | 13x13-E40-[S2] | 13x13-E40-[S3] | 13x13-E40-[S3] |
| | 1.5 | 13x13-E40-[S1] | 13x13-E40-[S2] | 13x13-E40-[S3] | n.p. | n.p. |
| | 2.0 | 15x15-E40-[S2] | 15x15-E40-[S3] | n.p. | n.p. | n.p. |
| | 2.5 | 15x15-E40-[S3] | n.p. | n.p. | n.p. | n.p. |
| H= 4-5 m | 1.0 | 13x13-D50-[S1] | 13x13-D50-[S2] | 13x13-E50-[S2] | 13x13-E50-[S3] | 13x13-E50-[S3] |
| | 1.5 | 13x13-E50-[S1] | 13x13-E50-[S2] | 13x13-E50-[S3] | n.p. | n.p. |
| | 2.0 | 15x15-E50-[S2] | 15x15-E50-[S3] | n.p. | n.p. | n.p. |
| | 2.5 | 15x15-E50-[S3] | n.p. | n.p. | n.p. | n.p. |

*n.p. - not present: a specific design is needed*

**WARNING:** fix the steel strut to the wooden beam with one nail for each hole on the end of the strut.


© CNVVF- Using allowed under CNVVF supervision

## **SHORES FOR BALCONIES:** general recommendations

STOP-**SB**/S

### Reference sketch

Geometrical parameters

L : span (max 3 m)

i : transverse distance between uprights

H : distance between two consecutive floors

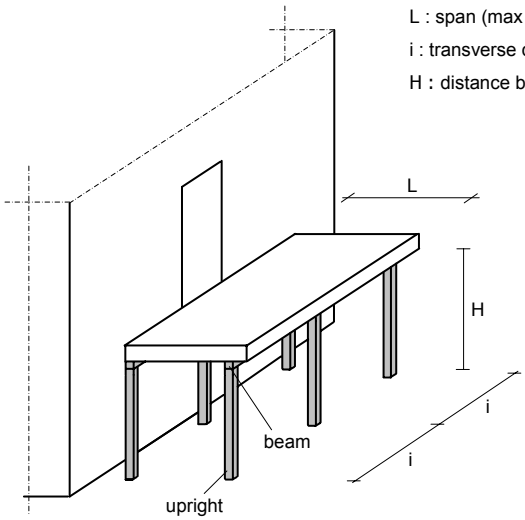


B2 DOUBLE SHORE

**Table 3 –** Sizing of the wooden beams and the wooden uprights

| H ≤ 4 m | | | | |
|---|---|---|---|---|
| i (m) \ L (m) | L ≤1.0m | 1.0m<L≤1.5m | 1.5m<L≤2.0m | 2.0m<L≤3.0m |
| 1.0 | 13x13-[B2] | 13x13-[B2] | 13x13-[B2] | 15x15-[B2] |
| 1.5 | 13x13-[B2] | 13x13-[B2] | 15x15-[B2] | n.p. |
| 2.0 | 13x13-[B2] | 15x15-[B2] | n.p. | n.p. |
| 2.5 | 15x15-[B2] | n.p. | n.p. | n.p. |

*n.p. - not present: a specific design is needed*

If 4m < H ≤ 6m, it is necessary to provide a bracing system (n. 2 planks 2.5 x 12 cm nailed on the uprights with 3 nails L = 80 mm in both directions).

**Table 4 –** Sizing of the wooden beams and of the steel stuts. Reference sketch [B2].
(see EN 1065 for the classification of the steel struts)

| | i(m) \ L(m) | L ≤1.0m | 1.0m<L ≤1.5m | 1.5m<L ≤2.0m | 2.0m<L ≤3.0m |
|---|---|---|---|---|---|
| H< 3 m | 1.0 | A30 | B30 | C30 | E30 |
| | 1.5 | B30 | C30 | E30 | n.p. |
| | 2.0 | C30 | E30 | n.p. | n.p. |
| | 2.5 | C30 | n.p. | n.p. | n.p. |
| H= 3-4 m | 1.0 | B40 | C40 | D40 | E40 |
| | 1.5 | C40 | D40 | E40 | n.p. |
| | 2.0 | D40 | E40 | n.p. | n.p. |
| | 2.5 | D40 | n.p. | n.p. | n.p. |
| H= 4-5 m | 1.0 | B50 | C50 | D50 | E50 |
| | 1.5 | C50 | D50 | E50 | n.p. |
| | 2.0 | D50 | E50 | n.p. | n.p. |
| | 2.5 | D50 | n.p. | n.p. | n.p. |
| To size the wooden beams see Table 3 | | | | | |

*n.p. - not present: a specific design is needed*


© CNVVF- Using allowed under CNVVF supervision

# WOODEN SHORES FOR SLABS AND BALCONIES: critical considerations

STOP-**SB**/S

## Critical considerations

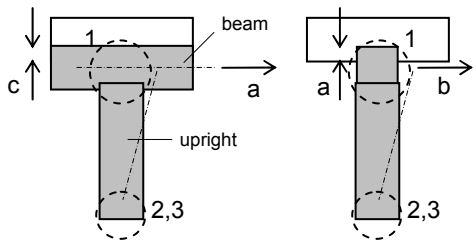


Overall critical considerations

a, b – horizontal displacement
c – separation or punching of the beam

Localised critical considerations

1 – separation of the beam/upright connection
2 – unloading of the shore
3 – collapse due to excessive load

## Managing the critical areas of WOODEN SHORES

### SHORES FOR SLABS

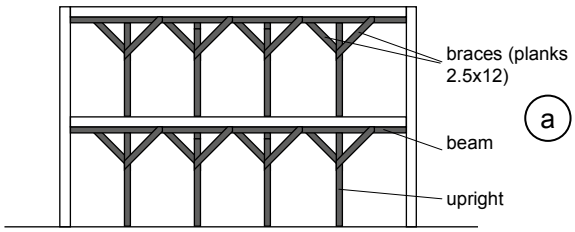


Longitudinal section

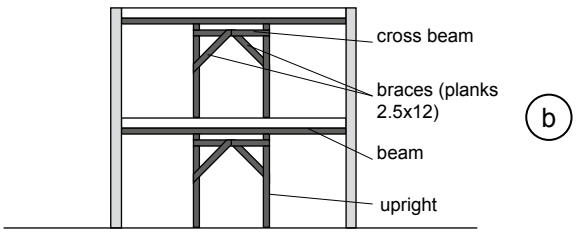


Transverse section

### SHORES FOR BALCONIES

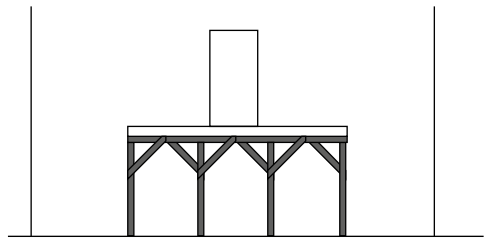

Longitudinal view

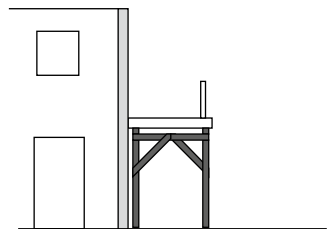

Lateral view

Provide a bracing system to stiffen the struts in transverse and longitudinal directions (n. 2 planks 2.5 x 12 cm nailed on the uprights with 3 nails L = 80 mm ). The cross section of the cross beam is the same as the uprights.

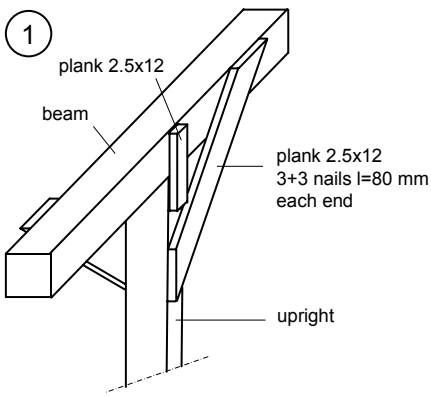


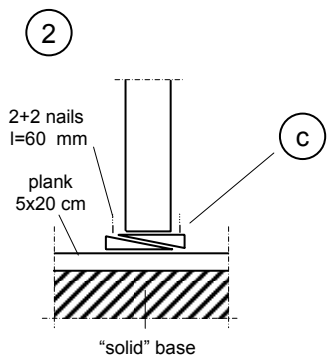


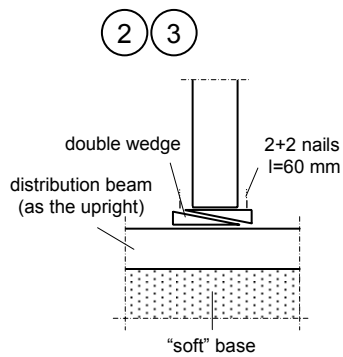



© CNVVF- Using allowed under CNVVF supervision

## WOODEN/STEEL SHORES FOR SLABS AND BALCONIES: critical considerations

STOP-**SB**/S

### Critical considerations

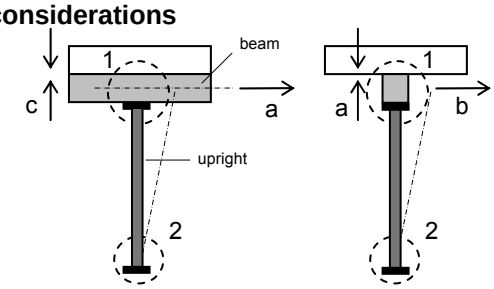


Overall critical considerations

a, b – horizontal displacement
c – separation or punching of the beam

Localised critical considerations

1 – separation of the beam/upright connection
2 – unloading of the shore
3 – collapse due to excessive load

### Managing the critical areas of STEEL SHORES

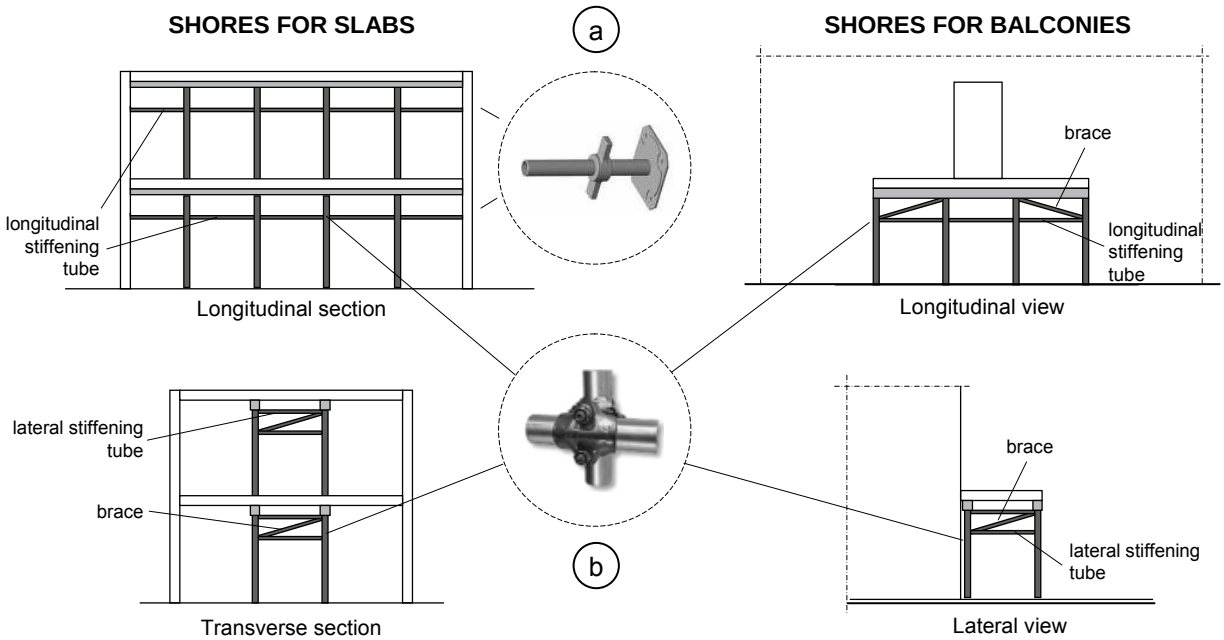


Steel tubes and special joints (b) to be linked to the extension on the telescopic strut to stiffen the structure. “Touch” the external structures with the special elements (a) to lock the system.

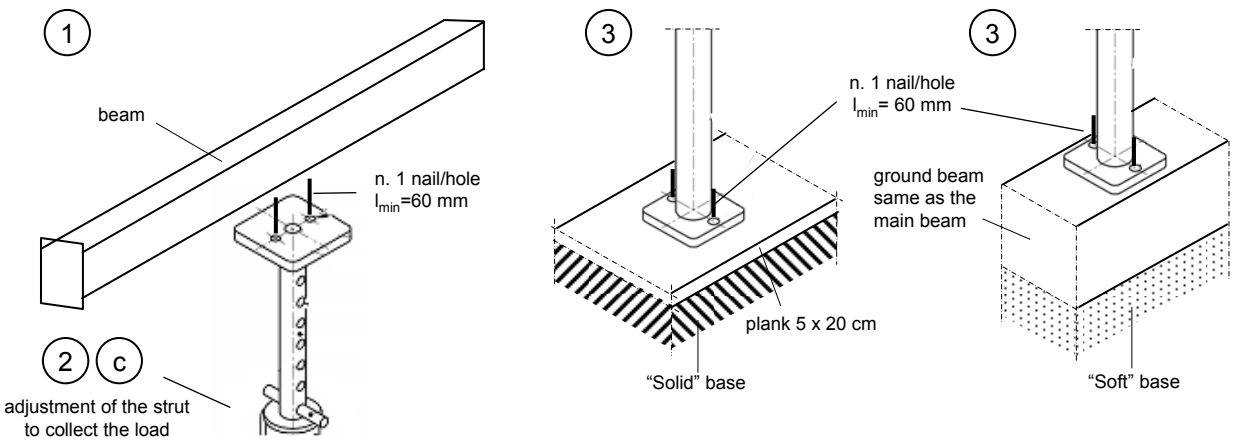



© CNVVF- Using allowed under CNVVF supervision

## **SHORES FOR SLABS AND BALCONIES:** steel telescopic struts

STOP-**SB**/S

**General assumptions**
Steel struts can only be used if:
• they are compliant to the EN 1065 standard;
• the provider is in possession of the conformity certification, relating to the above-mentioned technical rule, and issued by an official laboratory;
• the telescopic struts must come with a document or a manual that includes:
- a brief description of the struts and their components, also stating their definition in accordance with the UNI EN 1065 standard;
- any useful direction for a proper end-use;
- the instructions relating to maintenance and storage;
- reference to the test certificates required by the UNI EN 1065 standard;
- A provider's declaration of conformity to the DM 06/08/2004.

Check the class of the strut before using.
Every steel strut should be stamped as below:
- Conformity to the EN 1065 standard;
- Manufacturer
- Year of production;
- For the classification of the steel telescopic strut see EN 1065 (ex. C30, D40, E40, E50 …).

**Key**
1. Endplate
2. Outer tube
3. Inner tube
4. Length adjustment device
4.1 Attached pin
4.2 Outer ring
4.3 Handle
5. Central hole
6. Connection hole
7. Pin hole

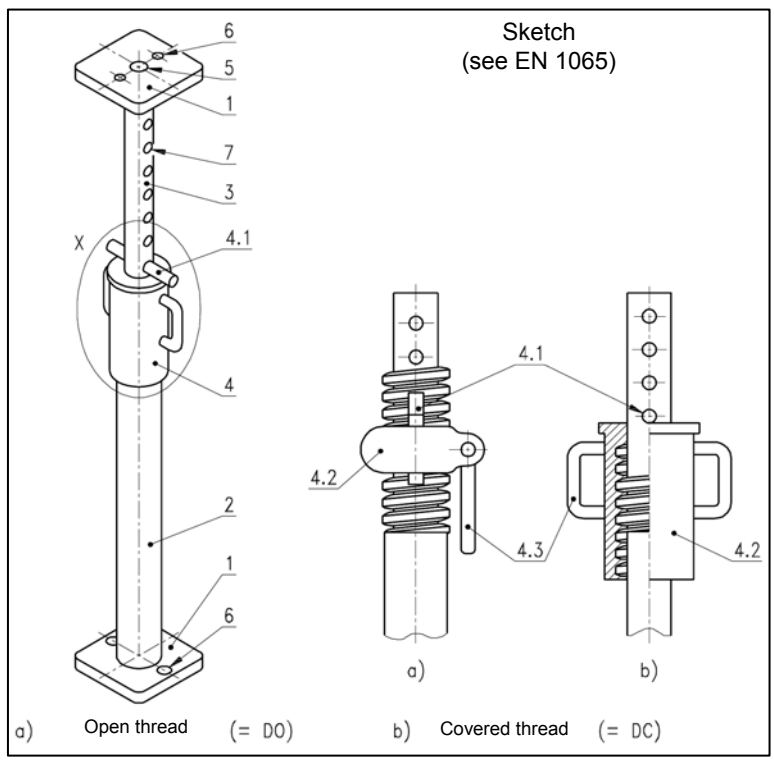



© CNVVF- Using allowed under CNVVF supervision

## **SHORES FOR SLABS AND BALCONIES:** general recommendations



### SHORES FOR SLABS – SINGLE LINE "S"

**Main assumptions**

This shore has been designed for clay-concrete floors, having a thickness equal to 1/25 of its span, and a distribution slab 4 cm thick, loaded according to the regulation in force for civil buildings. This shore has been sized assuming that the connections at the ends of the load bearing floor's members can prevent vertical movement while allowing rotation.

**General recommendations**

On page 2/10 three solutions for supporting the floor are proposed (S1, S2 and S3), depending on the floor span and on the chosen spacing between shores.

It must be noted that the span "L" must be intended as the distance between supports, which should be measured once that the floor support structure direction has been identified. To this aim, the main load bearing members should be carefully and correctly identified, by removing sections of plaster, if necessary.

It must be noted that, for intermediate floors, the utilization of the "S" solution requires that all the lower floors are shored up following the sequence shown on page 1/10. In any case, the solidity of the lower structure support plane should be assessed.

Once that the material of the supporting structure has been defined (entirely in wood or wood with steel struts), the span "L" and the distance between floors "H" should be measured. For wooden structures, the design is carried out according to tab. 1 which gives the dimensions for the uprights and for the supporting beam as well as the type of shoring system depending on the selected spacing of the uprights "i". For structures with steel shores, the design is carried out according to tab. 2 which gives the dimensions of the uprights and of the supporting beams as well as the type of shoring system depending on the selected spacing of the uprights "i" and on the floor distance "H".

The wooden members have been selected as far as possible with the same cross sections, in order to make it easier to find the correct materials and to make the connections between the elements themselves more effective .

### SHORES FOR BALCONIES

**Main assumptions**

This shore has been designed for balconies with a load bearing structure made from a solid concrete slab 15 cm thick and loaded according to the regulation in force.

This shore has been designed to support all the load.

**General recommendations**

On page 3/10 only one system for the balcony support has been proposed, taking into account that the scope of this shore is limited to balconies having an overhang not higher than 3 m.

The balcony shores should be designed in a similar way to that described for slab shores, according to tables 3 and 4 on page 3/10.

WARNING

All the dimensional figures must be intended as minimum design values. If a material specified in this section is not available, larger cross section for wooden elements may be used and, for steel members, the alternative materials shown in the table on the right, after consulting the following guidance, may be used. Once that the lower-right diagonal corresponding to the suggested shore is identified in the table, the cells positioned below the suggested cell and on that diagonal starting from the suggested cell should be considered. All the cells that are within the triangle described and up to the border of the table may be used.

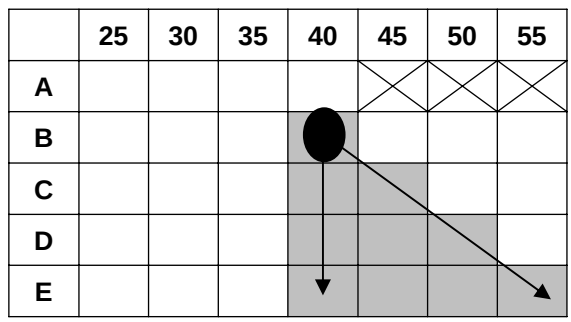


For example, instead of B40 it is possible to use:

C40, D40, E40, C45, D45, E45, D50, E50, E55


© CNVVF- Using allowed under CNVVF supervision

## SHORES FOR SLABS AND BALCONIES "T" SOLUTION: general recommendations

STOP-**SB**/T

### Reference sketches

T

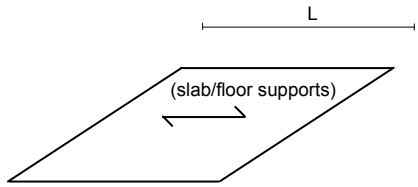


Nomenclature and reference geometrical parameters

L : span

i : distance between shores

H : distance between two consecutive floors

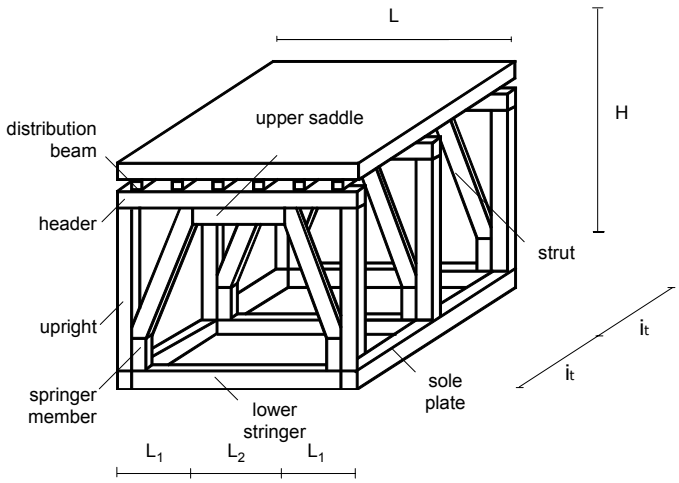


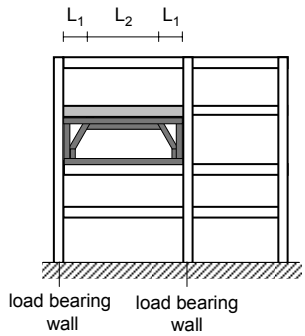


**Table 5 –** Sizing of the supporting system

| | L (m) | $L_1$ (m) | $L_2$ (m) | $i_t$ | header |
|---|---|---|---|---|---|
| H ≤ 4m | < 3.0 | about L/3 | about L/3 | max 1.5 m | 13x13 |
| | 3.0 - 4.0 | 1m < $L_1$ ≤ 1.25m | 1m < $L_2$ ≤ 1.5m | | 15x15 |
| | 4.0 - 5.0 | 1.25m < $L_1$ ≤ 1.5m | 1.5m < $L_2$ ≤ 2m | | 18x18 |
| | 5.0 - 6.0 | 1.5m < $L_1$ ≤ 1.75m | 2m < $L_2$ ≤ 2.5m | | 20x20 |
| 4 < H ≤ 6m | Stiffening beams should be placed close to about half length of struts and uprights (n.2 planks 2.5x12 fixed by n.3 nails l=80 mm) in order to reduce their free flexural length. | | | | |

| **Other members** | |
|---|---|
| upright | same as the header |
| strut | same as the header |
| sole plate | same as the header |
| upper saddle | same as the header |
| springer member | same as the header |
| distribution beam | beams 10x10 cm with transverse spacing equal to 50 cm |


© CNVVF- Using allowed under CNVVF supervision

## **WOODEN SHORE "T" SOLUTION:** critical considerations

STOP-**SB**/T

## Critical considerations

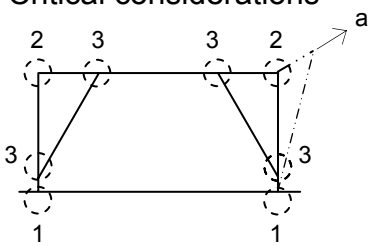


Overall critical considerations
a - possible side ways overturning/instability

Localised critical considerations
1 - possible unloading of the shore
2,3 - possible separation of the connections

## Managing overall and localised critical considerations

a

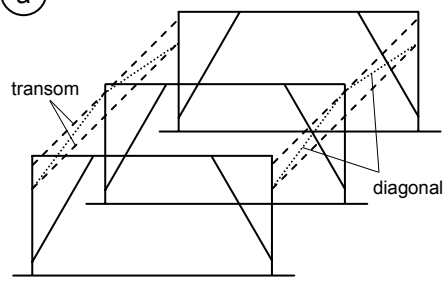


**Table 6 –** Placement of stiffening members

| L (m) | Cross bracing and diagonals |
|---|---|
| L ≤ 3.0m | Planks 2.5x12 cm fixed on the side by 2 x 80 nails or 2 screws $\phi$5x100 at each end |
| 3.0m < L ≤ 4.0m | |
| 4.0m < L ≤ 5.0m | beams 8x8 cm by 2 screws $\phi$6x160 or 2 x 150 nails at each end *or* planks 5x20 cm by 2 screws $\phi$5x100 or 2 x 100 nails for each end |
| 5.0m < L ≤ 6.0m | |

1

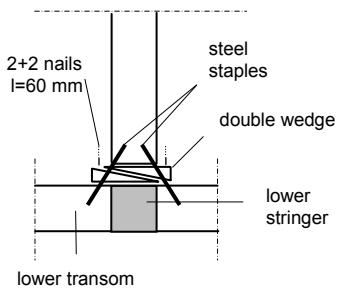


3

**Strut – upper saddle connection**

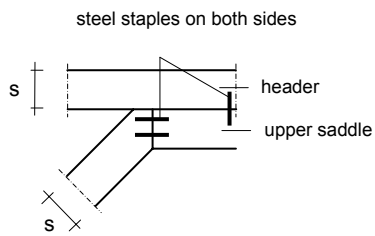


**Strut – spinger connection**

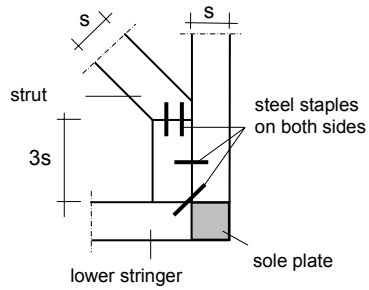


2

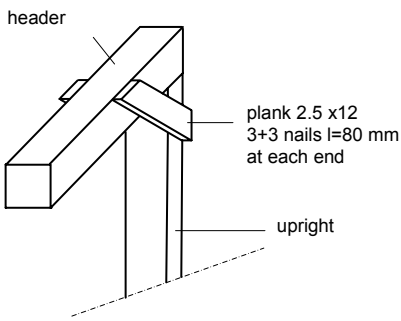


**Distribution beam– header support**

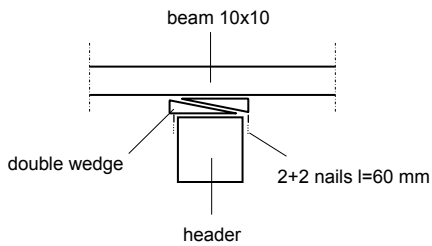


**WARNING:** the steel staples (minimum $\phi$8) can be replaced by connecting gussets on both sides (boards 2.5 cm thick nailed or screwed)


© CNVVF- Using allowed under CNVVF supervision

## SHORES FOR BALCONIES – "T" SOLUTION

### Main assumptions

This shore has been designed for clay-concrete floors, having a thickness equal to 1/25 of the span, and a distribution slab 4 cm thick, loaded according to the regulation in force for civil buildings. This shore is sized to support the whole floor, irrespective of any supports at the extremities.

### General directions

On page 8/10 a solution with minimum spacing of 1.5 m between each frame is proposed.
It must be noted that the proposed solution is aimed at transferring loads onto already existing load bearing members, which are assumed to be in good conditions.
Therefore, the position of load bearing elements should be carefully detected, in order to place the shore's supports close to them.
Once that the building type and the position of load bearing members has been defined, the span "L" and the distance between two consecutive floors should be measured. The design should be carried out according to table 5, which reports the relevant dimensions of the frame members and further reference for the geometrical definition of the structure.
The wooden members have been selected as far as possible with the same cross sections, in order to make it easier to find the correct materials and to make the connections between the elements themselves more effective.

### WARNINGS

All the dimensional figures should be intended as minimum design values. If the specified materials are not available, timbers with larger cross sections may be used.
The static conditions of load bearing walls should be preliminarily assessed in order to verify that their damage is light or that the load bearing capacity of the structure has not been significantly modified by the earthquake.
For this purpose, the following situations are assumed as acceptable:

- cracks less than 1 mm wide, no matter how distributed on the masonry, with no material ejection
- limited detachments or light displacements (< 1 mm) between portions of structures, for example between walls and floors or between walls and stairs or between perpendicular walls.
- out-of-plumb having limited extension and not related to in-elevation detachments phenomena or to foundations settlings due to the earthquake, which can be considered pre-existing and not affecting the load bearing capacity of structures.


© CNVVF- Using allowed under CNVVF supervision