VADEMECUM STOP

TIMBER RAKER SHORES

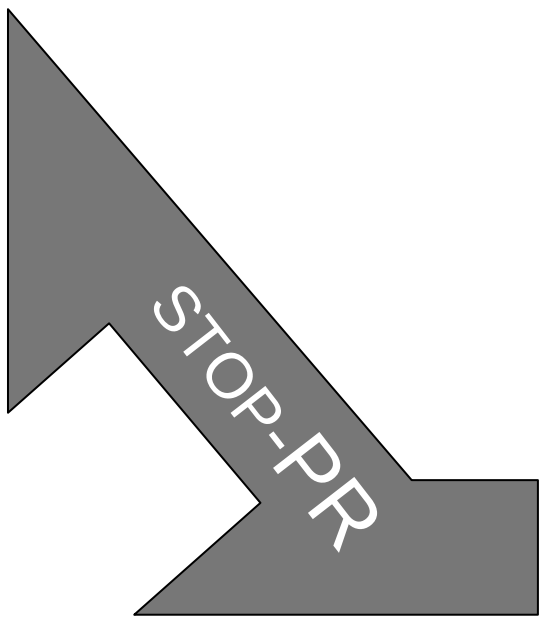

© CNVVF- Using allowed under CNVVF supervision

ABRUZZO EARTHQUAKE 2009
COORDINATION TEAM FOR TEMPORARY WORKS

WORKING GROUP FOR THE VADEMECUM STOP
under the supervision of Sergio Basti - Central director for emergency and urgent technical rescue manual licensed by note no. EM3064/5001-11 dated 2009-06-15

S.Grimaz (coordinator)
L.Munaro, M.Cavriani, E.Mannino, C.Bolognese, M.Caciolai, L.Ponticelli, M.Bellizzi, A. D'Odorico, A.Maiolo

With the contribute of:
F.Barazza, P.Malisan, A.Moretti

Translated by:
L. Ponticelli, S. La Mendola, E. Gissi
and
Keith Bellamy
Section Leader, Urban Search & Rescue
Hampshire Fire and Rescue Service, UK

© CNVVF- Using allowed under CNVVF supervision

TIMBER RAKER SHORES: selection criteria

STOP-**PR**

MAIN SCENARIOS

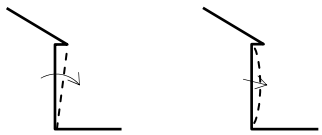

OUT OF VERTICAL PLANE ROTATION

BULGING OF THE WALL

SOLUTION WITH

SOLID SOLE RAKERS

see STOP-**PR**/B
(from page 2/15)

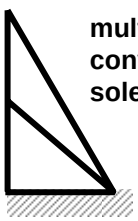

multiple insertion, converging, solid sole, rakers

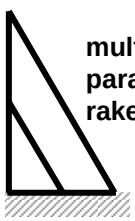

multiple insertion, parallel, solid sole, rakers

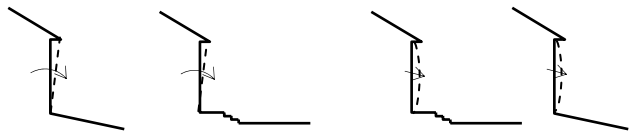

OUT OF VERTICAL PLANE ROTATION

BULGING OF THE WALL

SOLUTION WITH

FLYING RAKERS

see STOP-**PR**/S
(from page 9/15)

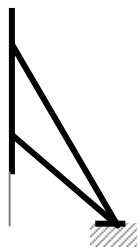

multiple insertion, converging flying raker on a single point base

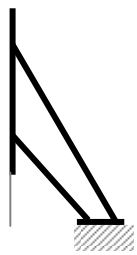

multiple insertion, flying raker on a short solid sole

NOTE: WALL RESTRAINING CAN BE ALSO DONE BY OTHER TECHNIQUES LIKE STEEL WIRE ROPE TIE BACKS. THE USE OF STEEL WIRE ROPE TIE BACKS SHALL BE PREFERRED WHEN THE DAMAGED WALL ABUTS ON A NARROW STREET.

© CNVVF- Using allowed under CNVVF supervision

SOLID SOLE RACKERS: general recommendations

STOP-**PR**/B

Movement to contrast:

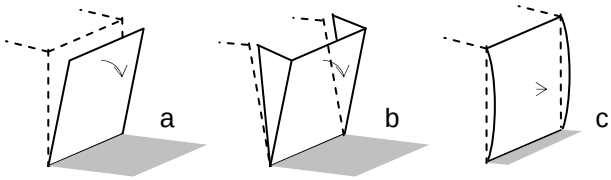

rotation bulging

Description

Potential out of plane rotation of a wall due to:
a) break of the joint between two perpendicular walls
b) break of the supporting perpendicular wall

Evidence of bulging on the external walls

Function of the raker: to prevent further rotation or bulging of the wall

STRUCTURAL SKETCHES (the following tables shall be used for both solutions)

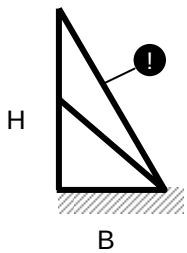

Critical element: ❗
the main raker

multiple insertion, converging, solid sole, rakers

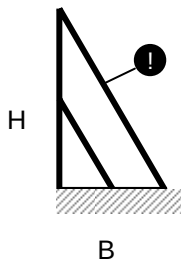

Critical element: ❗
the main raker

multiple insertion, parallel, solid sole, rakers

Shored wall area and supporting areas for each raker

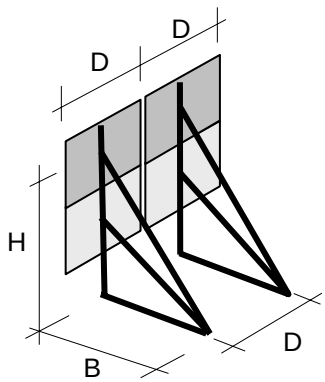

H main raker insertion point
D span between shores
B sole length

Table 1 – Selection of type depending on the height H

Height H (m)	**TYPE**
$2.0 \leq H \leq 3.0$ m	**R1** (see table R1)
$3.0 < H \leq 5.0$ m	**R2** (see table R2)
$5.0 < H \leq 7.0$ m	**R3** (see table R3)
$H > 7.0$ m	Use laminated timber or steel. Specific design required.

© CNVVF- Using allowed under CNVVF supervision

SOLID SOLE RACKERS: general recommendations

STOP-**PR**/B

R1

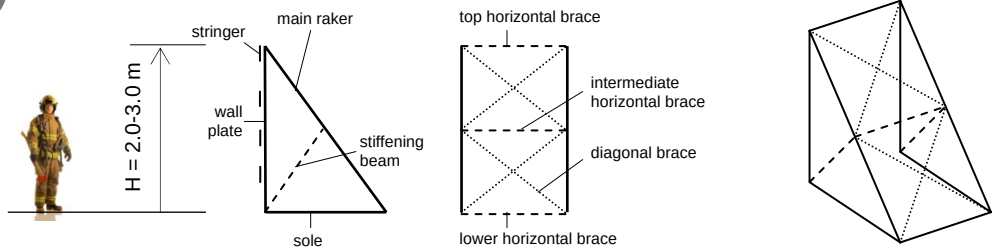

Table 2 – Main solid sole raker dimensions (cm x cm) for the type R1

R1 H 2.0-3.0 m	wall thickness s_m	≤ 0.6 m				0.6 – 1.0 m			
seismic class (see Annex 1)		class A		class B		class A		class B	
sole length B		1.5 m	2.5 m	1.5 m	2.5 m	1.5 m	2.5 m	1.5 m	2.5 m
span between shores D	D≤1.5 m	13 x 13	13 x 13	13 x 13	13 x 13	15 x 15	13 x 13	13 x 13	13 x 13
	1.5<D≤2.0 m	15 x 15	13 x 13	13 x 13	13 x 13	18 x 18	15 x 15	15 x 15	13 x 13

If no Annex 1 is provided, seismic class A should be used

Other elements	
sole	same as the main raker
wall plate	same as the main raker
stiffening beams	2 lengths of 2.5 x 12 cm screwed/nailed on the struts by 3 screws Ø5 x 100 mm or by 3 nails L = 80 mm each end
diagonal braces	lengths of 2.5 x 12 cm screwed/nailed by 2 screws Ø5 x 100 mm or by 3 nails L = 80 mm each end
horizontal braces	lengths of 8 x 8 cm screwed/nailed by 2 screws Ø6 x 160 mm or by 3 nails L = 150 mm each end
stringers	lengths of 5 x 20 cm with 1 m as the max distance between centres placed on the continuous parts of the wall

CORRECT ANGLE
OF THE MAIN RAKER

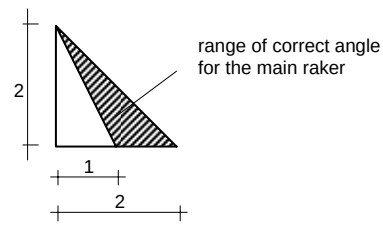

© CNVVF- Using allowed under CNVVF supervision

SOLID SOLE RACKERS: general recommendations

STOP-**PR**/B

R2

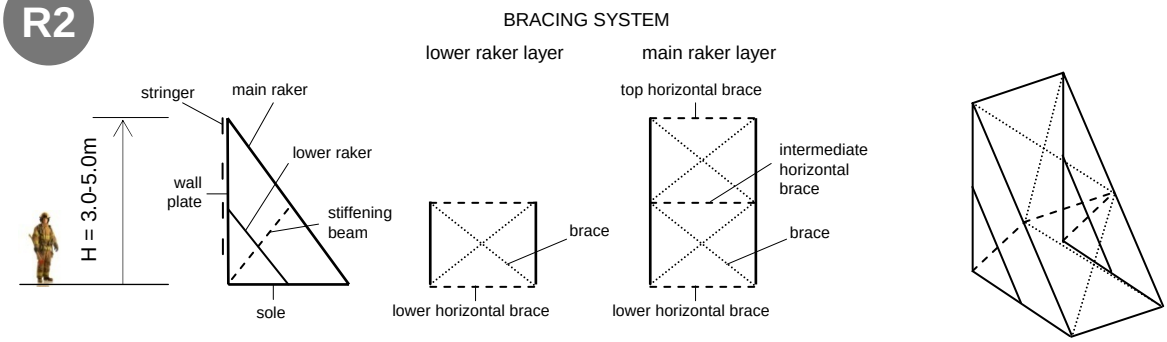

Table 3 - Main solid sole raker dimensions (cm x cm) for the type R2

R2 H 3.0-5.0m	wall thickness s_m	≤ 0.6 m				0.6 – 1.0 m			
seismic class (see Annex 1)		class A		class B		class A		class B	
sole length B		2.5 m	3.5 m	2.5 m	3.5 m	2.5 m	3.5 m	2.5 m	3.5 m
span between shores D	D≤1.0 m	13 x 13	13 x 13	13 x 13	13 x 13	15 x 15	15 x 15	15 x 15	13 x 13
	1.0<D≤1.5 m	15 x 15	15 x 15	15 x 15	13 x 13	18 x 18	18 x18	15 x 15	15 x 15
	1.5<D≤2.0 m	18 x 18	15 x 15	15 x 15	15 x 15	20 x 20	18 x 18	18 x 18	18 x 18
	2.0<D≤2.5 m	18 x 18	18 x 18	18 x 18	15 x 15	n.a.	18 x 18	20 x 20	18 x 18

n.a. - not avalilable, specific design required
If no Annex 1 is provided, seismic class A should be used

Other elements	
lower raker	same as the main raker
sole	same as the main raker
wall plate	same as the main raker
stiffening beams	2 lengths of 5 x 20 cm screwed/nailed on the struts by 3 screws Ø5 x 100 mm or by 3 nails L = 100 mm each end
braces	lengths of 5 x 20 cm screwed/nailed by 3 screws Ø5 x 100 mm or by 3 nails L = 100 mm each end *or* lengths of 8 x 8 cm screwed/nailed by 2 screws Ø6 x 160 mm or by 2 nails L = 150 mm each end
horizontal braces	lengths of 8 x 8 cm screwed/nailed by 2 screws Ø6 x 160 mm or by 2 nails L = 150 mm each end
stringers	lengths of 5 x 20 cm with 1 m as the max distance between centres placed on the continuous parts of the wall

CORRECT ANGLE
OF THE MAIN RAKER

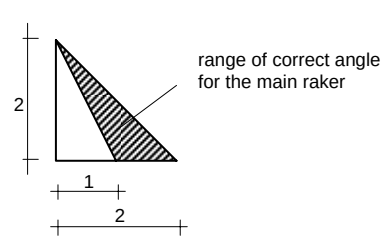

© CNVVF- Using allowed under CNVVF supervision

SOLID SOLE RACKERS: general recommendations

STOP-**PR**/B

R3

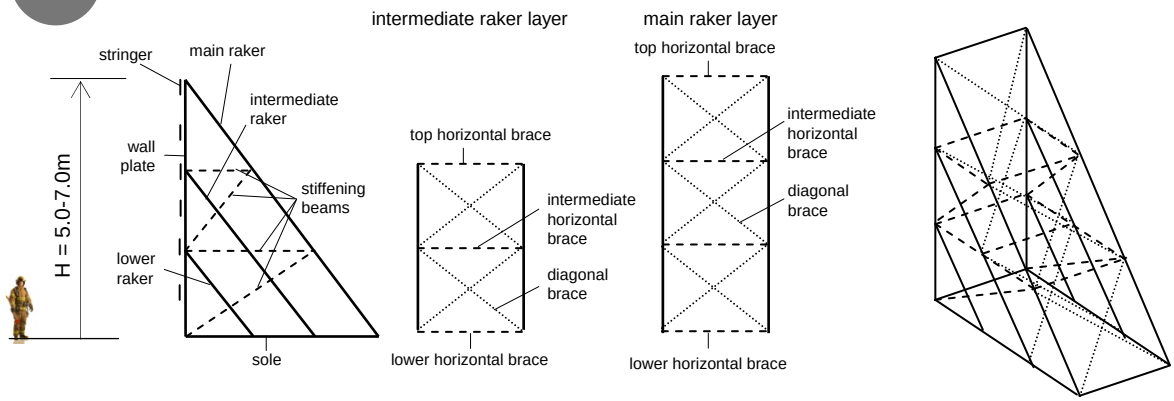

Table 4 - Main solid sole raker dimensions (cm x cm) for the type R3

R3 H 5.0-7.0 m	wall thickness s_m	≤ 0.6 m				0.6 m – 1.0 m			
seismic class (see Annex 1)		class A		class B		class A		class B	
sole length B		3.5 m	4.5 m	3.5 m	4.5 m	3.5 m	4.5 m	3.5 m	4.5 m
span between shores D	D≤1.0 m	20 x 20	20 x 20	20 x 20	20 x 20	20 x 20	20 x 20	20 x 20	20 x 20
	1.5<D≤2.0 m	20 x 20	20 x 20	20 X 20	20 x 20	n.a.	20 x 20	n.a.	20 x 20

n.a - not avalilable, specific design required
If no Annex 1 is provided, seismic class A should be used

Other elements	
lower raker	same as the main raker
sole	same as the main raker
Wall plate	same as the main raker
stiffening beams	2 lengths of 5 x 20 cm screwed/nailed on the struts by 3 screws Ø5 x 100 mm or by 3 nails L = 100 mm each end
braces	lengths of 5 x 20 cm screwed/nailed by 3 screws Ø5 x 100 mm or by 3 nails L = 100 mm each end *or* lengths of 8 x 8 cm screwed/nailed by 2 screws Ø6 x 160 mm or by 2 nails L = 150 mm each end
horizontal braces	lengths of 8 x 8 cm screwed/nailed by 2 screws Ø6 x 160 mm or by 2 nails L = 150 mm each end
stringers	lengths of 5 x 20 cm with 1 m as the max distance between centres placed on the continuous parts of the wall

CORRECT ANGLE
OF THE MAIN RAKER

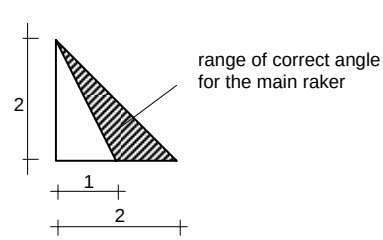

© CNVVF- Using allowed under CNVVF supervision

SOLID SOLE RAKERS: general recommendations

STOP-**PR**/B

Critical considerations

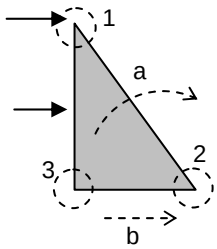

Global considerations
a – global rotation
b – base sliding

Local considerations
1 – breaking of the top node
2 – breaking of the lower external node
3 – breaking of the lower internal node

Global solutions

(a) (b)

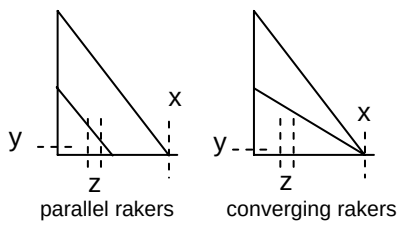

x – installing a restraining system to avoid the base sliding outward

y – embedding the sole into the wall or
anchoring the wall plate to the wall

or, instead of y:

z – pinning the sole to the ground using solution A on page 7/15.
Nailing length shall be half the sole length and start from the wall end.

WARNING: the z solution shall be employed ONLY IF it is not possible to embed the sole into the wall. In this case the wall plate to wall interface shall guarantee enough friction as to prevent the upward sliding of the shore.

Local solutions

(1) Wall plate-raker node

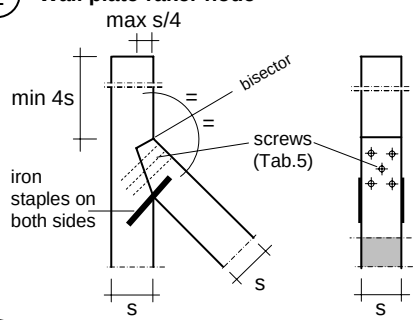

Table 5 – Screws and bolts

section	screws	bolts
13 x 13	5 ϕ10x150	2 ϕ16
15 x 15	5 ϕ12x180	3 ϕ16
18 x 18	5 ϕ12x200	4 ϕ16
20 x 20		

WARNING: Iron staples min ϕ8 or timber boards on both sides of the wall plate (2.5cm thickness, nailed or screwed)

(2) Raker-sole node

a

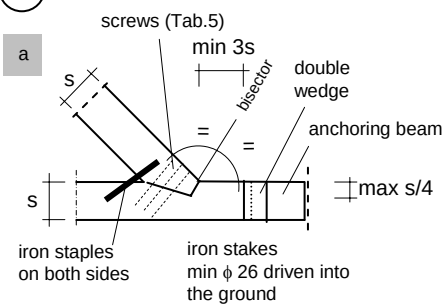

b

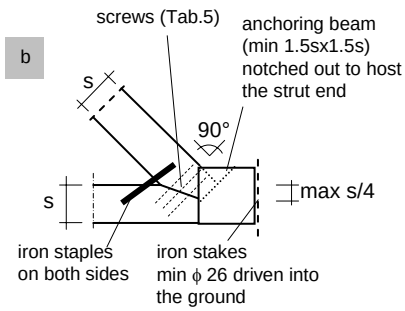

NOTE: both (a) and (b) are possible, but (a) is preferred

WARNING: the joint notch should never go deeper than s/4

(3) Wall plate-sole node

c

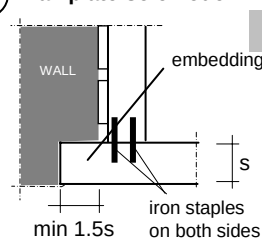

d

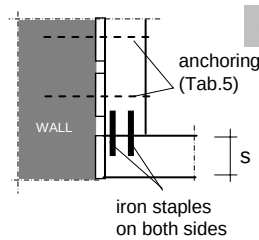

NOTE: (c) and (d) are alternative solutions

WARNING:
embedding or anchoring are not necessary when using the z solution.

© CNVVF- Using allowed under CNVVF supervision

SOLID SOLE RAKERS: anchoring solutions for the base

STOP-**PR**/B

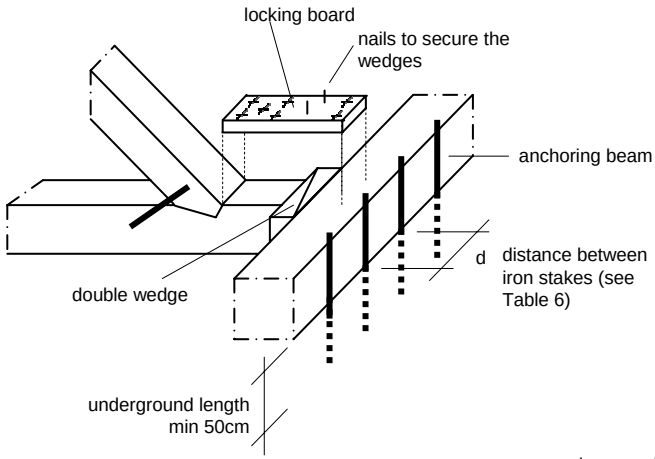

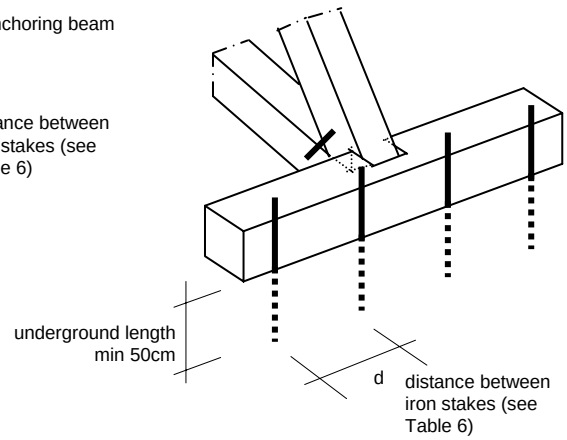

Stakes on a single side of the beam
(S)

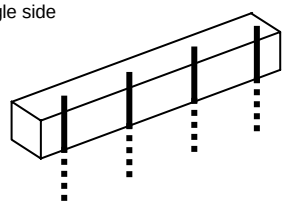

Stakes coupled
(A)

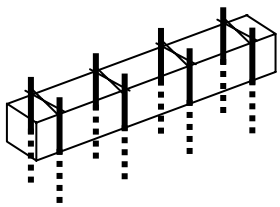

Double anchorage beam
(D)

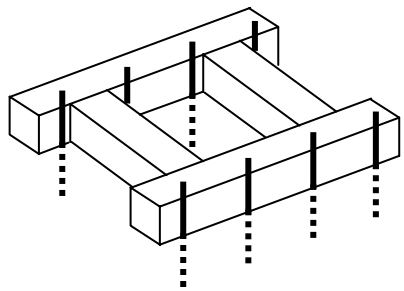

WARNING: remember to install protective elements over the stakes.

Table 6 - Distance d between the stakes

STAKES FOR ANCHORING	R1		R2		R3	
wall thickness s_m	≤0.6m	0.6<s_m≤1.0m	≤0.6m	0.6<s_m≤1.0m	≤0.6m	0.6<s_m≤1.0m
seismic class A	1 Ø26 every 50 cm (S)	1 Ø26 every 40 cm (S)	1 Ø26 every 30 cm (S)	1 Ø26 every 25 cm (S) or 40 cm on two rows (A) o (D)	1 Ø26 every 12.5 cm (S) or every 25 cm on two rows (A) o (D)	1 Ø26 every 10 cm (S) or every 20 cm on two rows (A) o (D)
seismic class B	1 Ø26 every 60 cm (S)	1 Ø26 every 50 cm (S)	1 Ø26 every 40 cm (S)	1 Ø26 every 30 cm (S) or 50 cm on two rows (A) o (D)	1 Ø26 every 15 cm (S) or every 30 cm on two rows (A) o (D)	1 Ø26 every 12.5cm (S) or every 25 cm on two rows (A) o (D)

NOTE: given the same distance between the stakes, when the (S) solution is allowed, also (A) and (D) are; if the (A) solution is allowed, also (D) is.
If no Annex 1 is provided, seismic class A should be used

© CNVVF- Using allowed under CNVVF supervision

TIMBER SOLID SOLE RAKER SHORES

Field of application
These solutions shall be used to support buildings damaged by earthquakes.

General assumptions
These raker shores shall be employed to restrain load bearing masonry walls not exceeding 1m thick. Two solutions are proposed: the tables R1, R2 and R3 shall be used for both parallel or converging rakers having the same height H.
"H" is defined as the difference in height between the sole lower point and the raker upper edge. This edge should be placed at a corresponding insertion point on the other side of the restrained wall, for example a slab, a vault, an arch, or a perpendicular wall, in order to effectively transfer the forces to the raker shore.
Given the height "H", the raker shore type R1, R2, or R3 is therefore chosen using table 1 at page 2/15. When H>7.0m, using laminated timber or steel instead of ordinary timber is recommended, and specific design of the raker shore is required.
Given the thickness of the restrained wall "s_m" and the seismic class (see Annex 1), once the span "D" and the sole length "B" are chosen, the raker shore shall be sized using table 2 for R1 type, table 3 for R2 type, table 4 for R3 type.
Many raker shore elements share the same section size to ease timber procurement and simplify the shore's connections.
On page 6/15 main construction critical considerations are listed, and corresponding solutions are showed. Some construction details of the shore's connections are proposed.
On page 7/15 two kinds of construction details for anchoring of the sole are shown.
In particular the sole anchoring should:
- prevent the upward displacement of the sole-wall plate node;
- prevent the outward displacement of the sole-raker node.

WARNING
All the provided dimensions are intended as minimum values. During the construction phase, thicker sections can be used, if available.

© CNVVF- Using allowed under CNVVF supervision

FLYING RAKERS: general recommendations

STOP-**PR**/S

Movement to contrast:

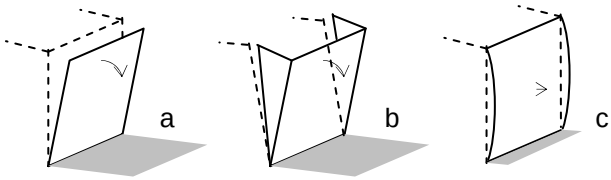

rotation bulging

Description:

Potential out of plane rotation of a wall due to:
a) break of the joint between two perpendicular walls
b) break of the supporting perpendicular wall

Evidence of bulging on the external walls

Function of the raker: to prevent further rotation or the bulging of the wall

STRUCTURAL SKETCHES (the following tables shall be used for both solutions)

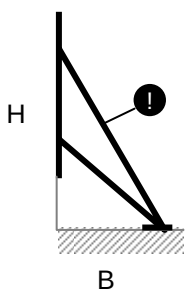

Critical element: ! the main raker

multiple insertion, converging, flying raker, on a single point base

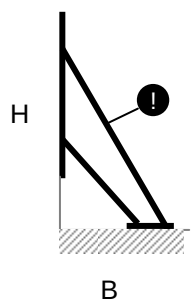

Critical element: ! the main raker

multiple insertion, flying raker, on a short solid sole

Shored wall area and supporting areas for each raker

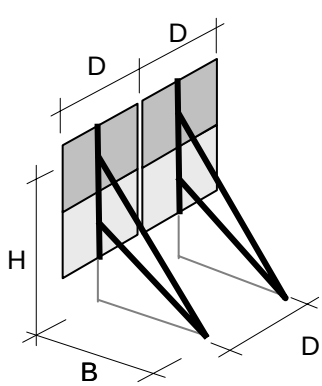

H main raker insertion point
D span between shores
B sole length

Table 7 – Selection of type depending on the height H

Height H (m)	**TYPE**
$2.0 \leq H \leq 3.0$ m	**R1** (see table R1)
$3.0 < H \leq 5.0$ m	**R2** (see table R2)
$5.0 < H \leq 7.0$ m	**R3** (see table R3)
$H > 7.0$ m	Use laminated timber or steel. Specific design required.

© CNVVF- Using allowed under CNVVF supervision

FLYING RAKERS: general recommendations

STOP-**PR**/S

R1

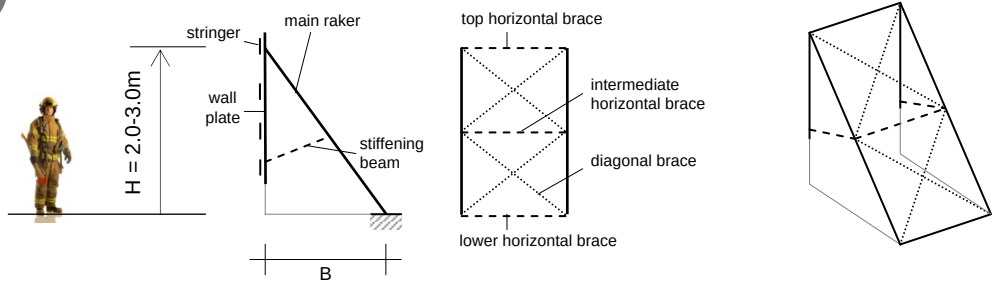

Table 8 – Main flying raker dimensions (cm x cm) for the type R1

R1 H 2.0-3.0m	wall thickness s_m	≤ 0.6 m				0.6 – 1.0 m			
seismic class (see Annex 1)		class A		class B		class A		class B	
sole length B		1.5 m	2.5 m	1.5 m	2.5 m	1.5 m	2.5 m	1.5 m	2.5 m
span between shores D	D≤1.5 m	13 x 13	13 x 13	13 x 13	13 x 13	15 x 15	13 x 13	13 x 13	13 x 13
	1.5<D≤2.0 m	15 x 15	13 x 13	13 x 13	13 x 13	18 x 18	15 x 15	15 x 15	13 x 13

If no Annex 1 is provided, seismic class A should be used

Other elements	
sole	same as the main raker
wall plate	same as the main raker
stiffening beams	2 lengths of 2.5 x 12 cm screwed/nailed on the struts by 3 screws Ø5 x 100 mm or by 3 nails L = 80 mm each end
diagonal braces	lengths of 2.5 x 12 cm screwed/nailed by 2 screws Ø5 x 100 mm or by 3 nails L = 80 mm each end
horizontal braces	lengths of 8 x 8 cm screwed/nailed by 2 screws Ø6 x 160 mm or by 3 nails L = 150 mm each end
stringers	lengths of 5 x 20 cm with 1 m as the max distance between centres placed on the continuous parts of the wall

CORRECT ANGLE
OF THE MAIN RAKER

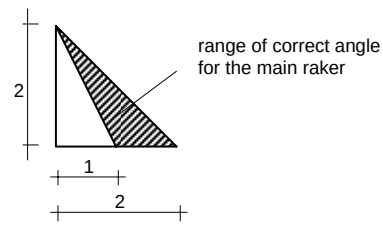

© CNVVF- Using allowed under CNVVF supervision

FLYING RAKERS: general recommendations

STOP-**PR**/S

R2

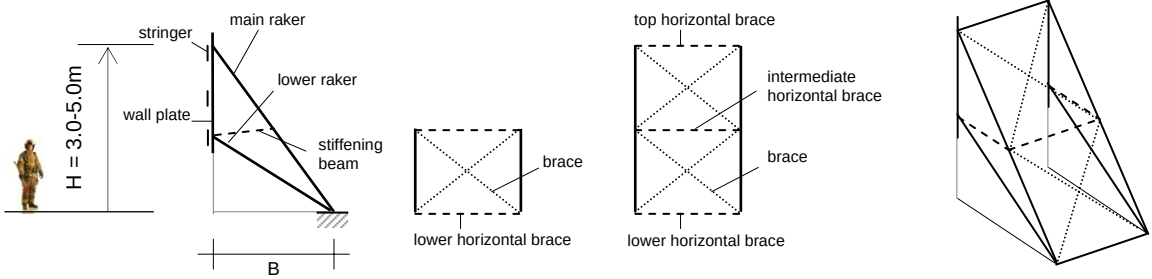

Table 9 - Main flying raker dimensions (cm x cm) for the type R2

R2 H 3.0-5.0 m	wall thickness s_m	≤ 0.6 m				0.6 – 1.0 m			
seismic class (see Annex 1)		class A		class B		class A		class B	
sole length B		2.5 m	3.5 m	2.5 m	3.5 m	2.5 m	3.5 m	2.5 m	3.5 m
span between shores D	D≤1.0 m	13 x 13	13 x 13	13 x 13	13 x 13	15 x 15	15 x 15	15 x 15	13 x 13
	1.0<D≤1.5 m	15 x 15	15 x 15	15 x 15	13 x 13	18 x 18	18 x18	15 x 15	15 x 15
	1.5<D≤2.0 m	18 x 18	15 x 15	15 x 15	15 x 15	20 x 20	18 x 18	18 x 18	18 x 18
	2.0<D≤2.5 m	18 x 18	18 x 18	18 x 18	15 x 15	n.a.	18 x 18	20 x 20	18 x 18

n.a. - not avalilable, specific design required
If no Annex 1 is provided, seismic class A should be used

Other elements	
lower raker	same as the main raker
sole	same as the main raker
wall plate	same as the main raker
stiffening beams	2 lengths of 5 x 20 cm screwed/nailed on the struts by 3 screws Ø5 x 100 mm or by 3 nails L = 100 mm each end
braces	lengths of 5 x 20 cm screwed/nailed by 3 screws Ø5 x 100 mm or by 3 nails L = 100 mm each end *or* lengths of 8 x 8 cm screwed/nailed by 2 screws Ø6 x 160 mm or by 2 nails L = 150 mm each end
horizontal braces	lengths of 8 x 8 cm screwed/nailed by 2 screws Ø6 x 160 mm or by 2 nails L = 150 mm each end
stringers	lengths of 5 x 20 cm with 1 m as the max distance between centres placed on the continuous parts of the wall

CORRECT ANGLE
OF THE MAIN RAKER

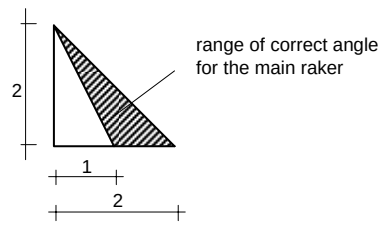

© CNVVF- Using allowed under CNVVF supervision

FLYING RAKERS: general recommendations

STOP-**PR**/S

R3

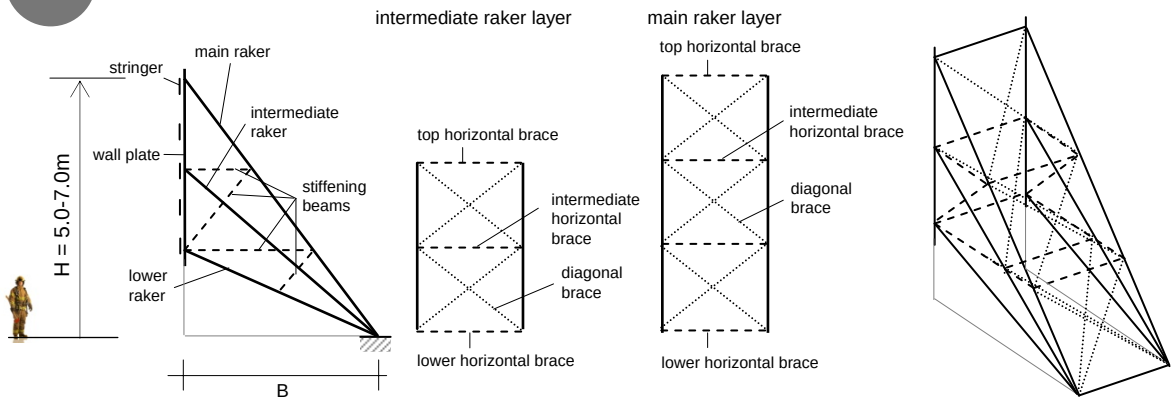

Table 10 - Main flying raker dimensions (cm x cm) for the type R3

R3 H 5.0-7.0 m	wall thickness s_m	≤ 0.6 m				0.6 m – 1.0 m			
seismic class (see Annex 1)		class A		class B		class A		class B	
sole lenght B		3.5 m	4.5 m	3.5 m	4.5 m	3.5 m	4.5 m	3.5 m	4.5 m
span between shores D	D≤1.0 m	20 x 20	20 x 20	20 x 20	20 x 20	20 x 20	20 x 20	20 x 20	20 x 20
	1.5<D≤2.0 m	20 x 20	20 x 20	20 X 20	20 x 20	n.a.	20 x 20	n.a.	20 x 20

n.a. - not avalilable, specific design required
If no Annex 1 is provided, seismic class A should be used

Other elements	
lower raker	same as the main raker
sole	same as the main raker
wall plate	same as the main raker
stiffening beams	2 lengths of 5 x 20 cm screwed/nailed on the struts by 3 screws Ø5 x 100 mm or by 3 nails L = 100 mm each end
braces	lengths of 5 x 20 cm screwed/nailed by 3 screws Ø5 x 100 mm or by 3 nails L = 100 mm each end *or* lengths of 8 x 8 cm screwed/nailed by 2 screws Ø6 x 160 mm or by 2 nails L = 150 mm each end
horizontal braces	lengths of 8 x 8 cm screwed/nailed by 2 screws Ø6 x 160 mm or by 2 nails L = 150 mm each end
stringers	lengths of 5 x 20 cm with 1 m as the max distance between centres placed on the continuous parts of the wall

CORRECT ANGLE
OF THE MAIN RAKER

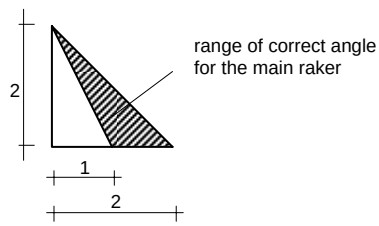

© CNVVF- Using allowed under CNVVF supervision

FLYING RAKERS: general recommendations

STOP-**PR**/S

Critical considerations

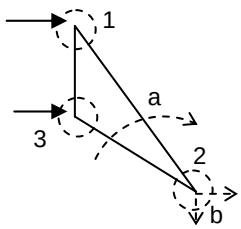

Global considerations
a – global rotation
b – base sliding/sinking

Local considerations
1 – breaking of the top node
2 – breaking of the lower external node
3 – breaking of the lower internal node

Global solutions

a b

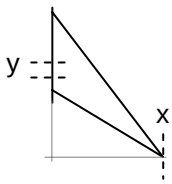

x – installing a restraining system to avoid the base sliding outward

y – anchoring the wall plate to the wall

WARNING: if the y solution is not possible, the wall plate to wall interface shall guarantee enough friction as to prevent the upward sliding of the shore.

Local solutions

1 **Wall plate-main raker node**

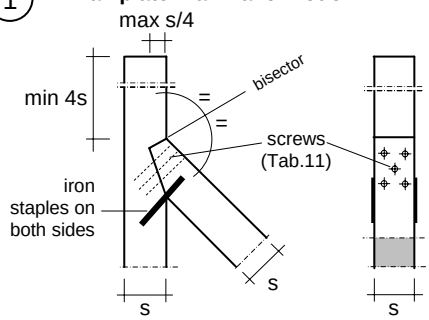

Table 11 – Screws and bolts

section	screws	bolts
13 x 13	5 ϕ10 x150	2 ϕ16
15 x 15	5 ϕ12 x180	3 ϕ16
18 x 18	5 ϕ12 x200	4 ϕ16
20 x 20		

WARNING: Iron staples min ϕ8 or timber slabs on both sides of the wall plate (2.5cm thickness, nailed or screwed)

3 **Wall plate-lower raker node**

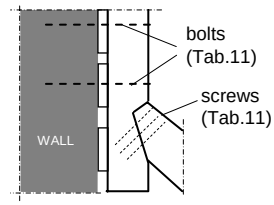

WARNING:
the bolts shall punch the stringers (if drilling the wall is not possible, follow previous global solutions)

2 **Lower node**

a

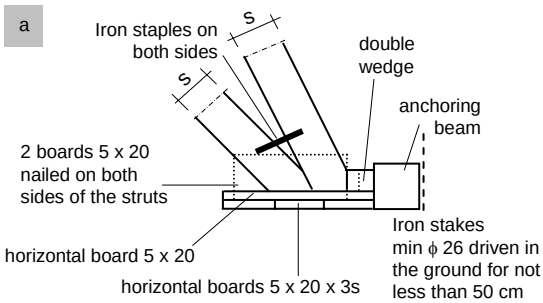

b

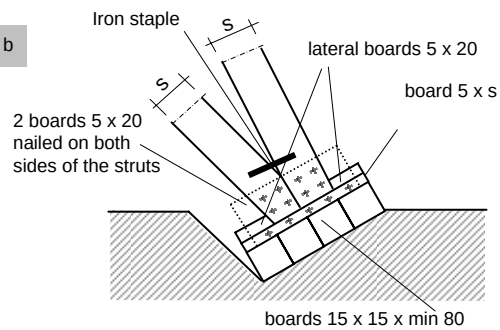

NOTE: both (a) and (b) are possible.

WARNING: The joint notch should never go deeper than s/4

© CNVVF- Using allowed under CNVVF supervision

FLYING RAKERS: anchoring solutions for the base

STOP-**PR**/S

Solution for the base (2a)

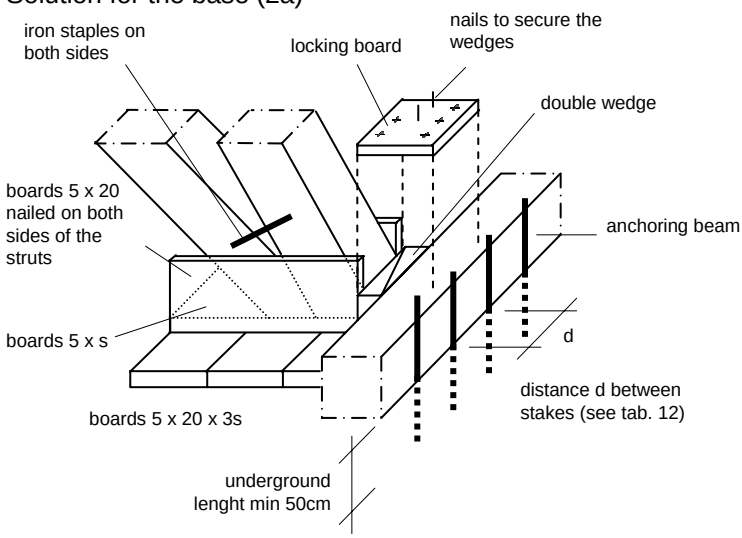

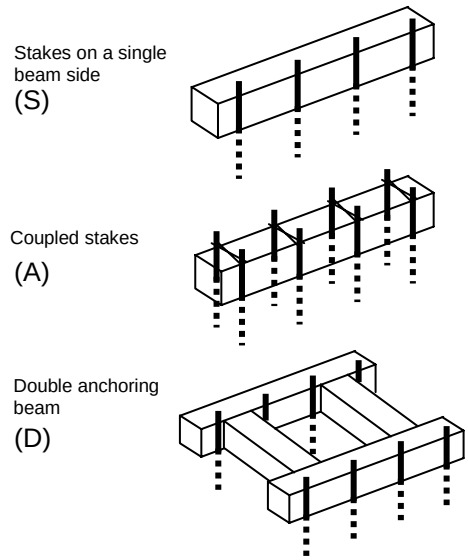

WARNING: remember to install protective elements over the stakes.

Table 12 - Distance d between the stakes

STAKES FOR ANCHORING	R1		R2		R3	
wall thickness s_m	≤0.6m	0.6<s_m≤1.0m	≤0.6m	0.6<s_m≤1.0m	≤0.6m	0.6<s_m≤1.0m
seismic class A	1 Ø26 every 50 cm (S)	1 Ø26 every 40 cm (S)	1 Ø26 every 30 cm (S)	1 Ø26 every 25 cm (S) or 40 cm on two rows (A) o (D)	1 Ø26 every 12.5 cm (S) or every 25 cm on two rows (A) o (D)	1 Ø26 every 10 cm (S) or every 20 cm on two rows (A) o (D)
seismic class B	1 Ø26 every 60 cm (S)	1 Ø26 every 50 cm (S)	1 Ø26 every 40 cm (S)	1 Ø26 every 30 cm (S) or 50 cm on two rows (A) o (D)	1 Ø26 every 15 cm (S) or every 30 cm on two rows (A) o (D)	1 Ø26 every 12.5cm (S) or every 25 cm on two rows (A) o (D)

NOTE: given the same distance between the stakes, when the (S) solution is allowed, also (A) and (D) are; if the (A) solution is allowed, also (D) is.

Solution for the base (2b)

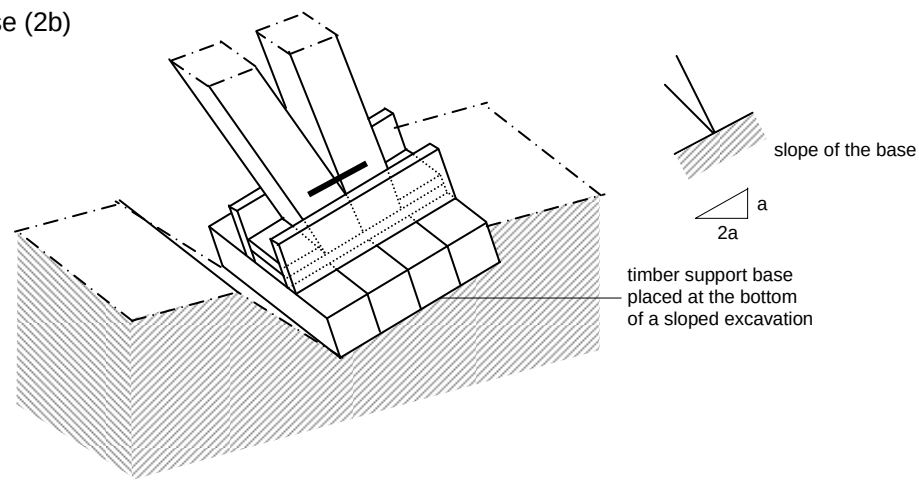

© CNVVF- Using allowed under CNVVF supervision

TIMBER FLYING RAKER SHORES

Field of application
These solutions shall be used to support buildings damaged by earthquakes.

General assumptions
These raker shores shall be employed to restrain load bearing masonry walls not exceeding 1m thick. Two solutions are proposed: the tables R1, R2 and R3 shall be used for both “single point base” and “short solid sole base” shores having the same height H.
“H” is defined as the difference in height between the sole lower point and the main raker upper edge. This edge should be placed at a corresponding insertion point on the other side of the restrained wall, as for example a slab, a vault, an arch, or an perpendicular wall, in order to effectively transfer the forces to the raker shore.
Given the height “H”, the raker shore type R1, R2, or R3 is therefore chosen using table 7 at page 9/15. When H>7.0m, using laminated timber or steel instead of ordinary timber is recommended, and specific design of the raker shore is required.
Given the thickness of the restrained wall “s_m” and the seismic class (see Annex 1), once the span “D” and the sole length “B” are chosen, the raker shore shall be sized using table 8 for R1 type, table 9 for R2 type, table 10 for R3 type.
Many raker shore elements share the same section size to ease timber procurement and simplify the shore’s connections.
On page 13/15 main construction critical considerations are listed, and corresponding solutions are showed. Some construction details of the shore’s connections are proposed.
On page 14/15 two kinds of construction details for anchoring of the sole are shown.
In particular the sole anchoring should prevent the sole from sliding.

WARNING
All the provided dimensions are intended as minimum values. During the construction phase, thicker sections can be used, if available.

© CNVVF- Using allowed under CNVVF supervision

INTENTIONALLY BLANK PAGE

© CNVVF- Using allowed under CNVVF supervision